FM series

Snap-in rocker switches - panel cut-out 19 x 13 (.750 x .508)

Distinctive features and specifications

藝科(歐亞)科技有限公司
ARTLAND TECHNOLOGY LIMITED
香港電話: 00852-26900182
深圳電話: 0755-83454850
公司電郵: sales@artland-tech.com
公司網址: www.artland-tech.com

UG1410A

D

- ❑ **Illuminated and non-illuminated**
- ❑ **For class II appliances**
- ❑ **VDE and UL approved**
- ❑ **Protection against moisture by double-shell case**

When the switch is submitted to moisture (drops, condensation), the double-shell case conducts the liquid outside, thus protecting the contact area and terminals. The light dripping inside the equipment resulting from this should be evacuated by adequate arrangement on back of panel.

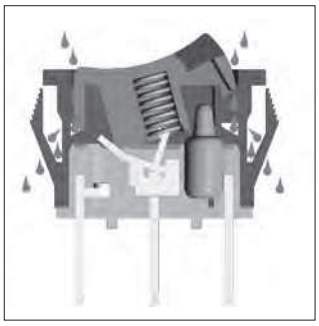

- ❑ **Protection by boot**

In case of sand or splashing water, the best protection consists of insulating the rocker from these aggressive elements. This can be achieved with transparent PVC boot **U5720**. Order separately, see section H.

AGENCY APPROVALS

EN 61058-1

Availability : functions 1 and 6

Marking : approved models are standard marked.

Dimensions : first dimensions are in mm while inches are shown as bracketed numbers.

Packaging unit : 50 pieces.

The company reserves the right to change specifications without notice.

FM series

Snap-in rocker switches - panel cut-out 19 x 13 (.750 x .508)

Single pole - non-illuminated

- Approved ratings (functions 1 and 6) :
  VDE : 10(4)A 250VAC T85°C - **UL** : 6A 250VAC & 125VAC T65°C
- Max. contact rating :
  - functions 1 and 6 : see above.
  - function 3 : 4A 250VAC
  - functions 8 and 9 : 6A 250VAC
- Initial contact resistance : 20mΩ max.
- Insulation resistance : 1.000 MΩ min. at 500VDC
- Dielectric strength : - functions 1 and 6 : 2.500 Vrms between terminals
  - functions 3, 8 and 9 : 1.500 Vrms between terminals
- Electrical life at full load : 10 000 cycles

- Operating temperature :
  -20°C to +85°C
- Case, frame, rocker : PA6/6
- Contacts : silver
- Terminals : silver plated

- Panel cut-out :

Panel thickness	Dim. Y	Dim. Z
0,75 to 1,25 mm	19,2 +0/-0,1	12,9 +0,15/-0
1,25 to 2 mm	19,4 +0/-0,1	12,9 +0,15/-0
2 to 3 mm	19,8 +0/-0,1	12,9 +0,15/-0

FM	C			A			0	0	

SERIES

Rocker

C	Non illum. Concave

Electrical functions

1	ON	-	OFF
3	MOM	-	OFF
6	ON	-	ON
8	ON	OFF	MOM
9	ON	OFF	ON

Terminals

2	Solder lug
8	Quick-conn.
9	Straight PC (funct. 1 & 6)

Contacts

A	Silver

Frame colour

2	Black

Others : on request.

Rocker colours

1	Blue
2	Black (std)
3	Green
4	Grey
5	Yellow
6	Red (std)
7	Ivory
7/1	White
9	Orange

Lens colour

0	No lens

Lamp

0	None

Marking *

000	None
001	0
002	0 —
003	0 I
004	I 0 II
005	OFF ON

* **Colour of marking** : white for black rockers - black for other colours - Other : on request.

D

Single throw and double throw switch

	1-2		2-3
FMC1	ON	-	OFF
FMC3	MOM	-	OFF
FMC6	ON	-	ON
FMC8	ON	OFF	MOM
FMC9	ON	OFF	ON

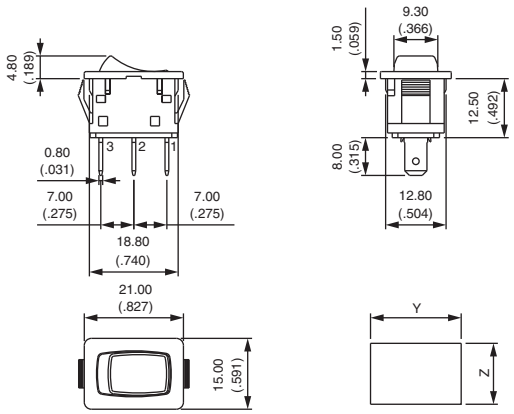

Shown with quick-connect terminals

TERMINALS

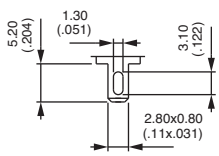

2
Solder lug

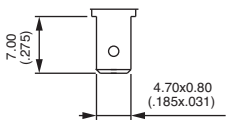

8
Quick-connect

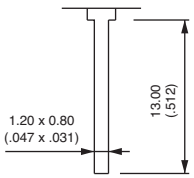

9
Straight PC (functions 1 and 6 only)

FM series

Snap-in rocker switches - panel cut-out 19 x 13 (.750 x .508)

Single pole - illuminated

藝科(歐亞)科技有限公司
ARTLAND TECHNOLOGY LIMITED
香港電話: 00852-26900182
深圳電話: 0755-83454850
公司電郵: sales@artland-tech.com
公司網址: www.artland-tech.com

- Approved ratings :
  VDE : 10(4)A 250VAC T85°C - **UL** : 6A 250VAC & 125VAC T65°C
- LED types available :
  3,3V (4V max.) 10mA LED (resistor to be series connected by the user)
  5V or 12V LED with integrated resistor
- Initial contact resistance : 20mΩ max.
- Insulation resistance : 1.000 MΩ min. at 500VDC
- Dielectric strength : 2.500 Vrms between terminals
- Electrical life at full load : 10 000 cycles
- Operating temperature: - 20°C to + 85°C
- Case, frame and rocker : PA6/6
- Lens : PC
- Contacts : silver
- Terminals : silver plated
- Lamp terminal : no plating
- Fluorescent lamp for blue or green lens, neon lamp for other colours
- Panel cut-out :

Panel thickness	Dim. Y	Dim. Z
0,75 to 1,25 mm	19,2 +0/-0,1	12,9 +0,15/-0
1,25 to 2 mm	19,4 +0/-0,1	12,9 +0,15/-0
2 to 3 mm	19,8 +0/-0,1	12,9 +0,15/-0

FM	L	1	8	A					

SERIES

Rocker
- **L** Illumin. concave

Electr. function
- **1** ON - OFF

Terminals
- **8** Quick-connect

Contacts
- **A** Silver

Frame colour
- **2** Black

Others : on request.

Rocker colour
- **1** Blue
- **2** Black (std)
- **3** Green
- **4** Grey
- **5** Yellow
- **6** Red (std)
- **7** Ivory
- **7/1** White
- **9** Orange

Lens colour
- **1** Blue *
- **3** Green *
- **5** Yellow
- **6** Red
- **8** Translucent
- **9** Orange

* w. fluorescent lamp

Lamp
- **A** 220V neon
- **B** 220V fluor.
- **C** 110V neon
- **D** 110V fluor.

LED 3,3V 10mA
- **E** Blue
- **F** Red/green
- **G** Green
- **H** Yellow
- **J** White
- **K** Red
- **L** Orange

No resistor**

LED 5V
- **N** Green
- **P** Yellow
- **Q** Red

LED 12V
- **T** Green
- **U** Yellow
- **V** Red

Marking *
- **000** None
- **001** 0

* **Colour of marking** : white for black rockers - black for other colours - Other : on request.

** Resistor value = $\frac{\text{supply voltage - LED forward voltage}}{\text{LED forward current}}$

Illuminated switches - quick-connect terminals

FML1 ON - OFF

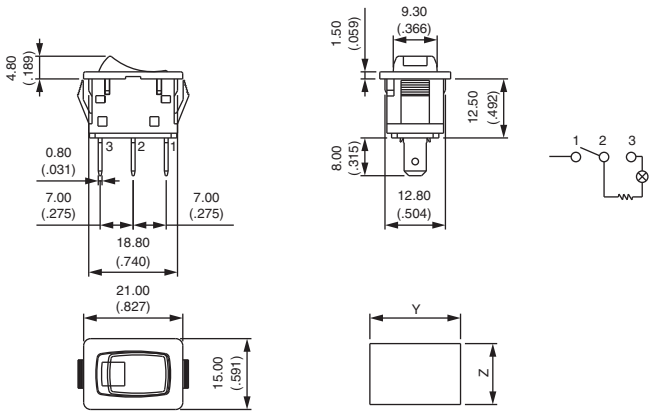

For LED models, terminal 2 = cathode (-), terminal 3 = anode (+)