AK 3020

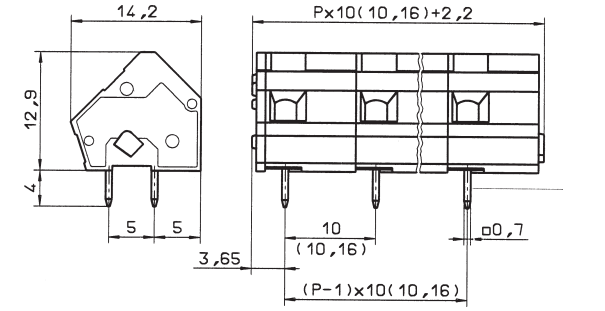

P = No. of poles

AK 3021

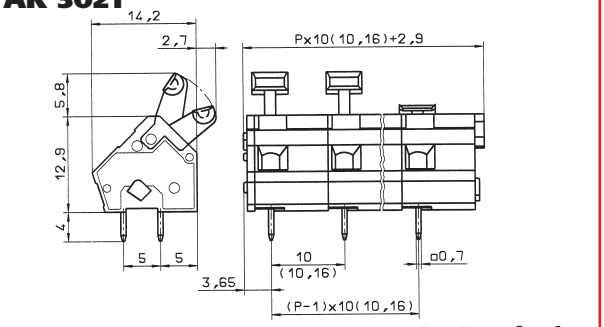

P = No. of poles

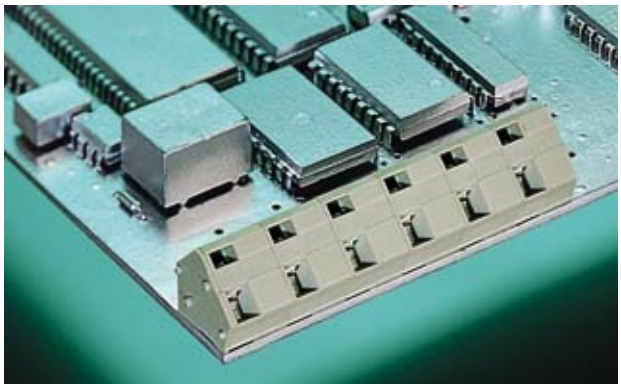

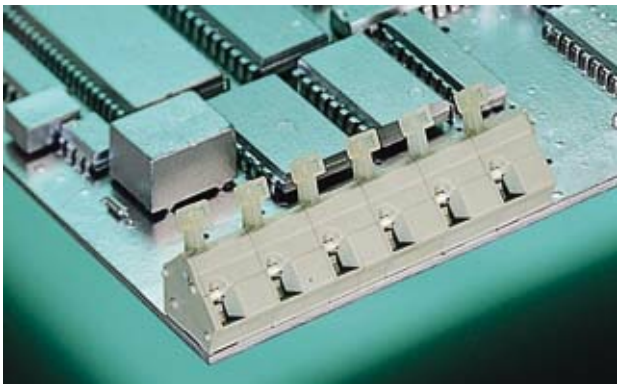

AK 3020/.. - 10,0 - slade grey

1-n poles, Spacing 10,0 mm adjustable to 10,16 mm
insert required no. of poles ..

Ratings:

	UL 1059	CSA 22.2 No. 158	EN 60998
Rated Voltage	**300 V**	**300 V**	**1000 V**
Rated Current	**16 A**	**16 A**	**24 A (T60)**
Wire Size	**AWG 28-14**	**AWG 28-14**	**2,5 mm²**
Test Voltage			**3,5 kV**
Max. Rated Cross Section			
Single Wire (solid)			**2,5 mm²**
Stranded Wire (flexible)			**2,5 mm²**
Stranded wire with Ferrules			**1,5 mm²**

Dimensions	
Spacing	**10,0 mm (10,16 mm)**
PCB Hole Diameter	**1,0 mm (2x)**
Stripped Length	**6,0 mm**
Materials	
Insulating Material	**PA**
Flammability Class	**UL94 V-0**
Temperature Range	**-30°C/+105°C**
Cage clamp	**stainless steel**
Wire Guard	**Cu**
Colour	
slade grey	**RAL 7032**

AK 3021/.. KD - 10,0 - slade grey

1-n poles, Spacing 10,0 mm adjustable to 10,16 mm
insert required no. of poles ..

Ratings:

	UL 1059	CSA 22.2 No. 158	EN 60998
Rated Voltage	**300 V**	**300 V**	**1000 V**
Rated Current	**16 A**	**16 A**	**24 A (T60)**
Wire Size	**AWG 28-14**	**AWG 28-14**	**2,5 mm²**
Test Voltage			**3,5 kV**
Max. Rated Cross Section			
Single Wire (solid)			**2,5 mm²**
Stranded Wire (flexible)			**2,5 mm²**
Stranded wire with Ferrules			**1,5 mm²**

Dimensions	
Spacing	**10,0 mm (10,16 mm)**
PCB Hole Diameter	**1,0 mm (2x)**
Stripped Length	**6,0 mm**
Materials	
Insulating Material	**PA**
Flammability Class	**UL94 V-0**
Temperature Range	**-30°C/+105°C**
Cage clamp	**stainless steel**
Wire Guard	**Cu**
Colour	
slade grey	**RAL 7032**

Distributed by ARTLAND.
Tel: 852-26900180 Fax: 852-26900213
E-mail: sales@artland-tech.com
web site: www.artland-tech.com